CPU Architecture

LAB3 assignment

Digital System Design with VHDL

(Simple RISC Multi-Cycle CPU design)

Hanan Ribo

22/04/2026

Table of contents

1. Aim of the Task: 3
2. Assignment definition: 3
3. Controller based system: 3
4. File-based simulation of DUT: 8
5. Applications and Software Quality Assurance: 8
6. SRMC Toolchain IDE: 8
7. Requirements: 9
8. Grading Policy 10

1. Aim of the Task:

- System design using concurrent and sequential logic principles using advanced Simulation methods (based on material given in LAB1 and LAB2 tasks).
- Controller design based on methodology of Control and Datapath separation.
- Preparation for LAB4 task – FPGA based design synthesis of a given design.
- Proper analysis and understanding of architecture design.
- Performing and understanding functional validation and verification of an architecture design.

2. Assignment definition:

In this task, you are required to design a controller-based processing machine as a Multi-cycle CPU to run a given program code. The preparation material for this lab has been learned in the prerequisites course "Central Processing Unit Architecture - theory" until lecture five and includes in addition to the self-leaning material given on a subjects of FSM methodology design and advanced functional verification.

3. Controller-based system:

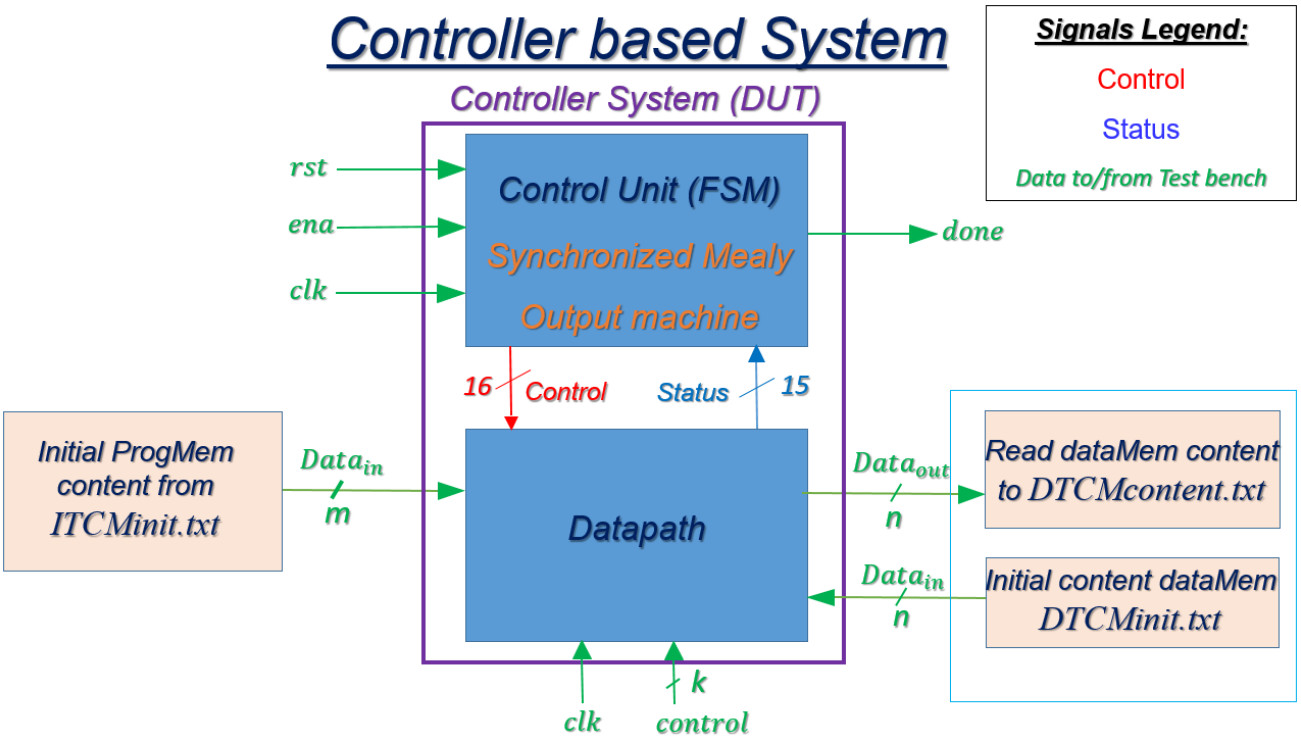

Figure 1: Overall DUT structure

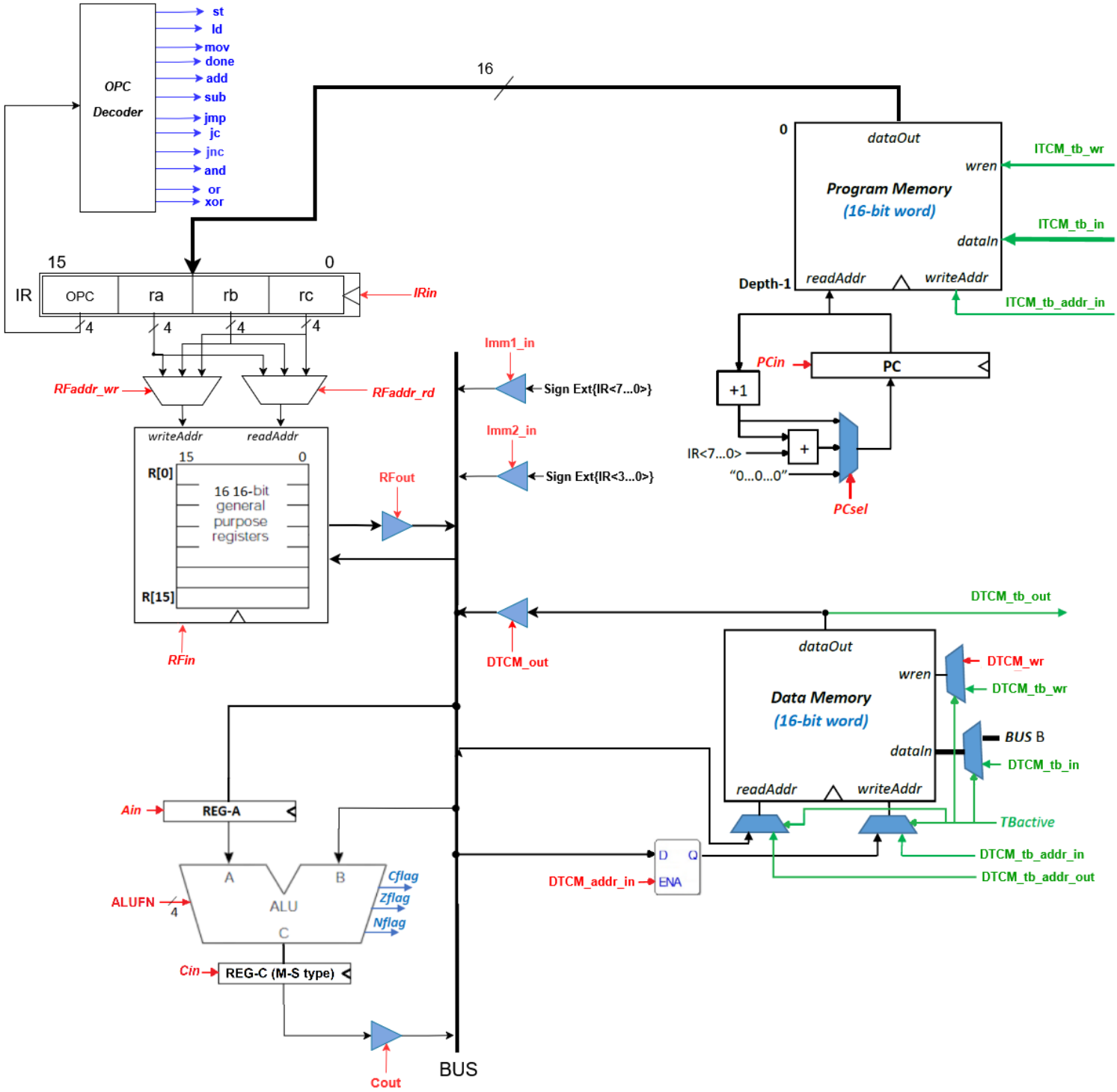

Figure 2: SRMC Datapath structure of a 1-BUS multicycle CPU

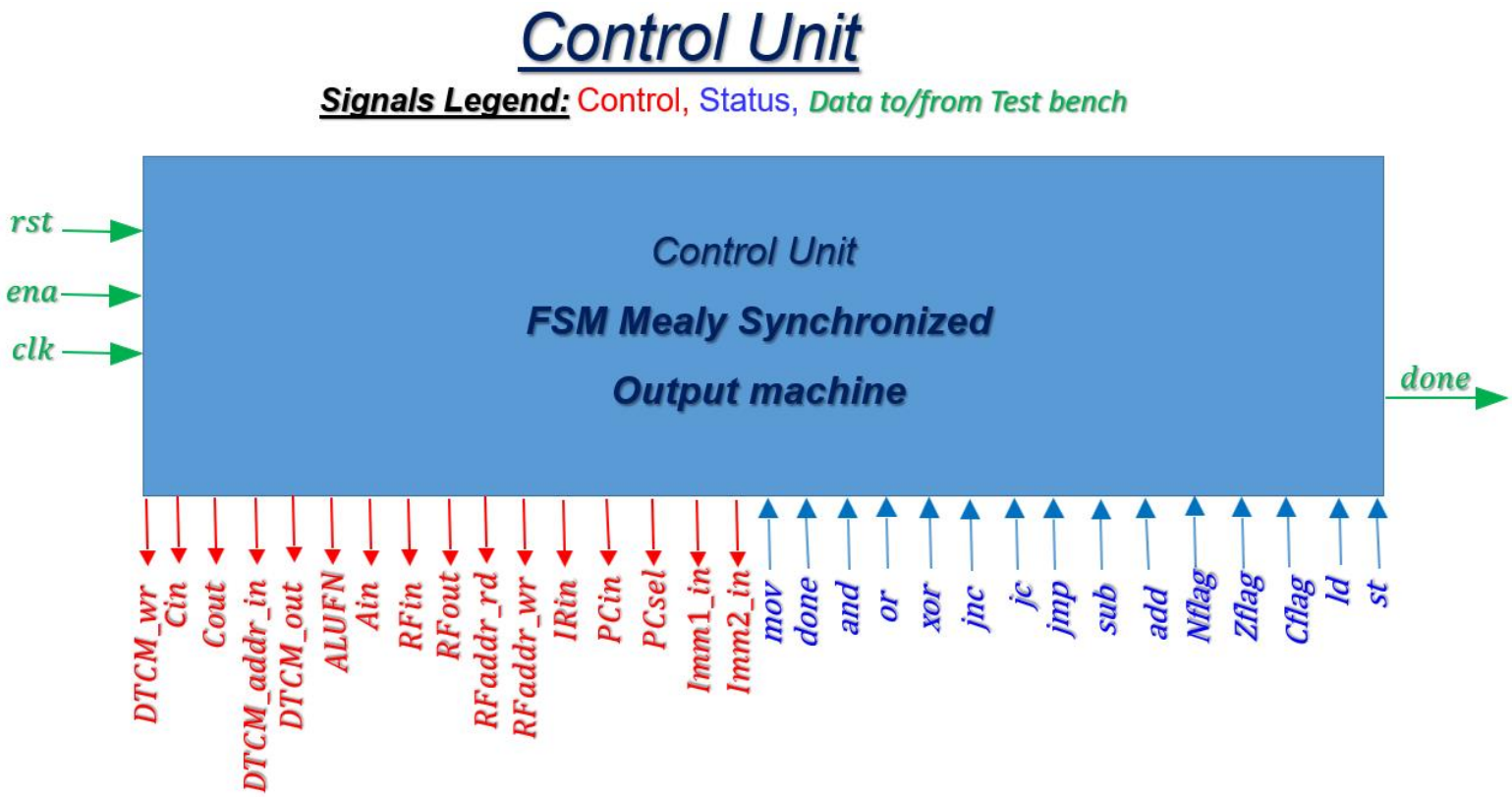

Figure 3: SRMC Control Unit Module

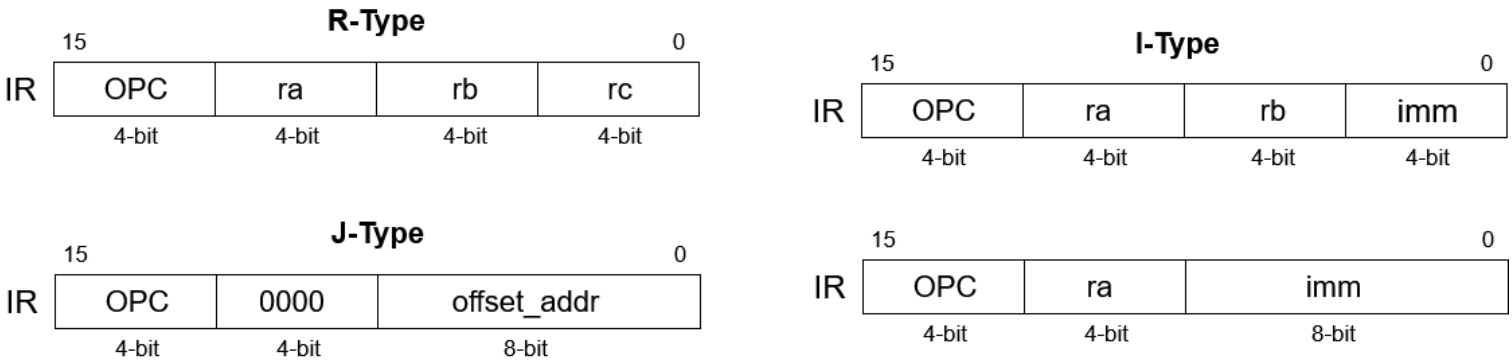

Figure 4: SRMC Instruction Formats subdivided into three types

ADDRESS MODE	SYNTAX	INSTRUCTION FORMAT	EXAMPLE	OPERATION
Register	add ra,rb,rc	R-Type	add r4,r2,r1	$R[4] \leftarrow R[2] + R[1]$
Immediate	mov ra,imm	I-Type	mov r5,0x30 mov r5,Var	$R[5] \leftarrow 0x30$ $R[5] \leftarrow Var$
Direct	ld ra,imm(r0)		ld r4,0x20(r0) ld r4, Var(r0)	$R[4] \leftarrow M[0x20]$ $R[4] \leftarrow M[Var]$
Indirect	ld ra,0(rb)		ld r4,0(r3)	$R[4] \leftarrow M[R[3]]$
Indexed	ld ra,imm(rb)		ld r4,0x20(r3) ld r4, Var(r3)	$R[4] \leftarrow M[0x20 + R[3]]$ $R[4] \leftarrow M[Var + R[3]]$

Table 1: SRMC-I Addressing Mode

Instruction Format	Decimal value	OPC	Instruction	Explanation	N	Z	C
R-Type	0	0000	add ra,rb,rc	R[ra]<=R[rb]+R[rc]	*	*	*
			nop	R[0]<=R[0]+R[0] (*emulated instruction*)	*	*	*
	1	0001	sub ra,rb,rc	R[ra]<=R[rb]-R[rc]	*	*	*
	2	0010	and ra,rb,rc	R[ra]<=R[rb] and R[rc]	*	*	*
	3	0011	or ra,rb,rc	R[ra]<=R[rb] or R[rc]	*	*	*
	4	0100	xor ra,rb,rc	R[ra]<=R[rb] xor R[rc]	*	*	*
	5	0101	*unused*				
	6	0110	*unused*				
J-Type	7	0111	jmp offset_addr	PC<=PC+1+offset_addr	-	-	-
	8	1000	jc /jhs offset_addr	If(Cflag==1) PC<=PC+1+offset_addr	-	-	-
	9	1001	jnc /jlo offset_addr	If(Cflag==0) PC<=PC+1+offset_addr	-	-	-
	10	1010	*unused*				
	11	1011	*unused*				
I-Type	12	1100	mov ra,imm	R[ra]<=imm	-	-	-
	13	1101	ld ra,imm(rb)	R[ra] <= M[imm+R[rb]]	-	-	-
	14	1110	st ra,imm(rb)	M[imm+R[rb]] <= R[ra]	-	-	-
Special	15	1111	done	Signals the TB to read the DTCM content	-	-	-

Note: ***** The status flag bit is affected , **-** The status flag bit is not affected

Table 2: SRMC instruction set, recall that R[0] is a zero value (hard-wired).

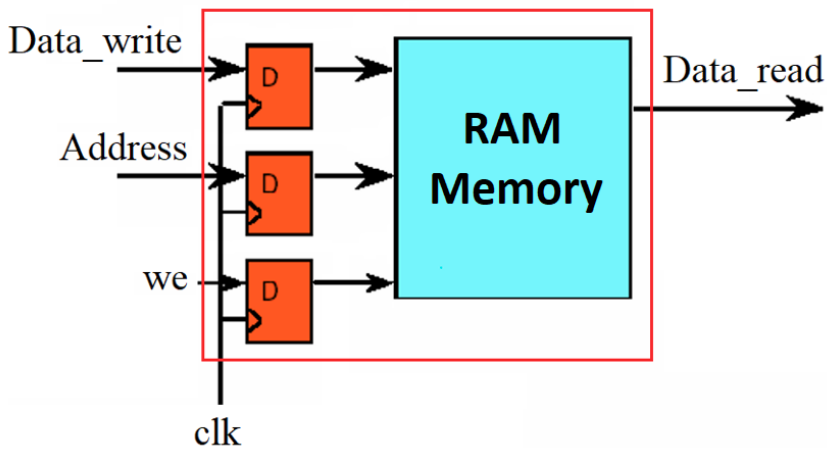

Figure 5: Single Port RAM with an unregistered output. This structure is used for Register File and Program Memory (ITCM) with a given VHDL code.

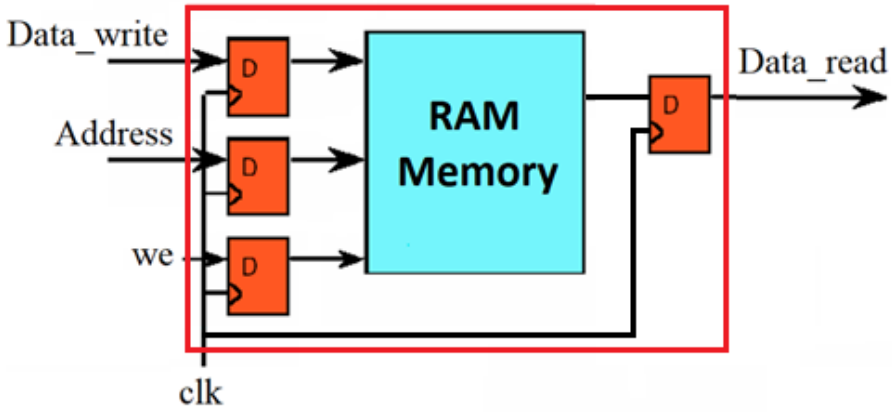

Figure 6: Single Port RAM with a registered output. This structure is used for Data Memory (DTCM) with a given VHDL code.

- **<u>The next encircled files must be used in your project</u>:**

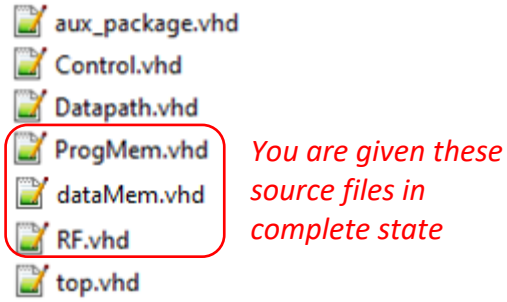

  - ✓ You must use the listed above source files, you are required to fill them up yourself**.**
  - ✓ You can add additional VHDL source code files.
  - ✓ Other entities can be designed and modeled behaviorally, structurally, etc.

4. File-based simulation of DUT:

- As depicted in Figure 1, we use a file-based simulation to simulate the system DUT.
- <u>Two Input and one Output files (according to the above given figure in clause 3)</u>:

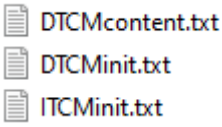

5. Applications and Software Quality Assurance:

Each application in the next list contains five files:

C file, ASM file, two binary files for ITCM and DTCM initialization, and a file of DTCM content after code running.

- ✓ Code Example 1
- ✓ Code Example 2
- ✓ Code Example 3
- ✓ Code Example 4

6. SRMC Toolchain IDE:

The SRMC Toolchain contains an assembler, an emulator, and a simulator.

SRMC-I assembler v1_1.exe (for Windows)

SRMC-I assembler v1_1- python code

SRMC-I Assembler_Emulator_Simulator_v2.exe

7. Requirements:

1. The design must be well commented on.
2. Elaborated analysis and waveforms:
   - Remove irrelevant signals.
   - Zoom on regions of interest.
   - Draw clouds on the waveform with explanations of what is happening (Figure 4).
   - Change the waveform colors in ModelSim for clear documentation **(Tools->Edit Preferences->Wave Windows).**
3. A ZIP file in the form of **id1_id2.zip** (where id1 and id2 are the identification numbers of the submitters, and id1 < id2) *must be uploaded to Moodle only by the student with id1* (any of these rules' violations disqualifies the task submission).
4. <u>The **ZIP** file will contain (***only the exact next subfolders***):</u>

Directory	Contains	Comments
DUT	Project VHDL files	**Only VHDL files of DUT**, excluding the test bench **<u>Note:</u> your project files must be well compiled without errors as a basic condition before submission**
TB	VHDL files that are used for test bench	One **tb.vhd** for the Datapath One **tb.vhd** for the Control unit One **tb.vhd** for the overall DUT
SIM	ModelSim DO files (wave, list)	One **tb.vhd** for the Datapath One **tb.vhd** for the Control unit One **tb.vhd** for the overall DUT (with Datatpath and Control unit signals included)
SW QA	SW test applications	Completion of the given Ex5 and Ex6 SW QA
DOC	Project documentation	• ***readme.txt*** (list of the DUT **.vhd* files with their brief functional description) • ***pre3.pdf*** (report file that includes brief explanation of the top module with its wave diagrams as shown in figure 4) • ***designGraph.pdf*** *(*elaborated FSM graph of your DUT)

Table 2: Directory Structure

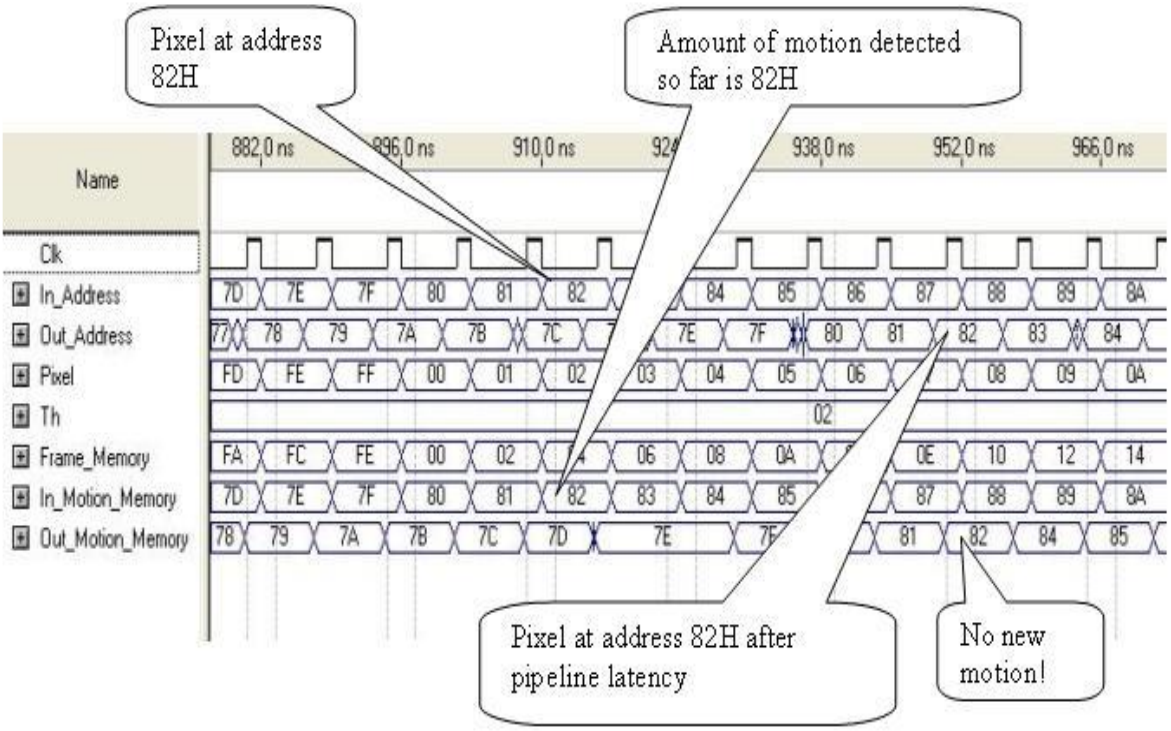

Figure 4: Clouds over the waveform example

8. Grading Policy

Weight	Task	Description
10%	Documentation	The "clear" way in which you presented the requirements and the analysis, and the conclusions on the work you've done
90%	Analysis and Test	The correct analysis of the system (under the LAB3 SEAT requirements)

Table 3: Grading

Under the above policies, you'll also be evaluated using common sense:

- Your files will be compiled and checked; the system must work.
- Your design and architecture must be intelligent, minimal, effective, and well organized.